INSTALLATION GUIDE

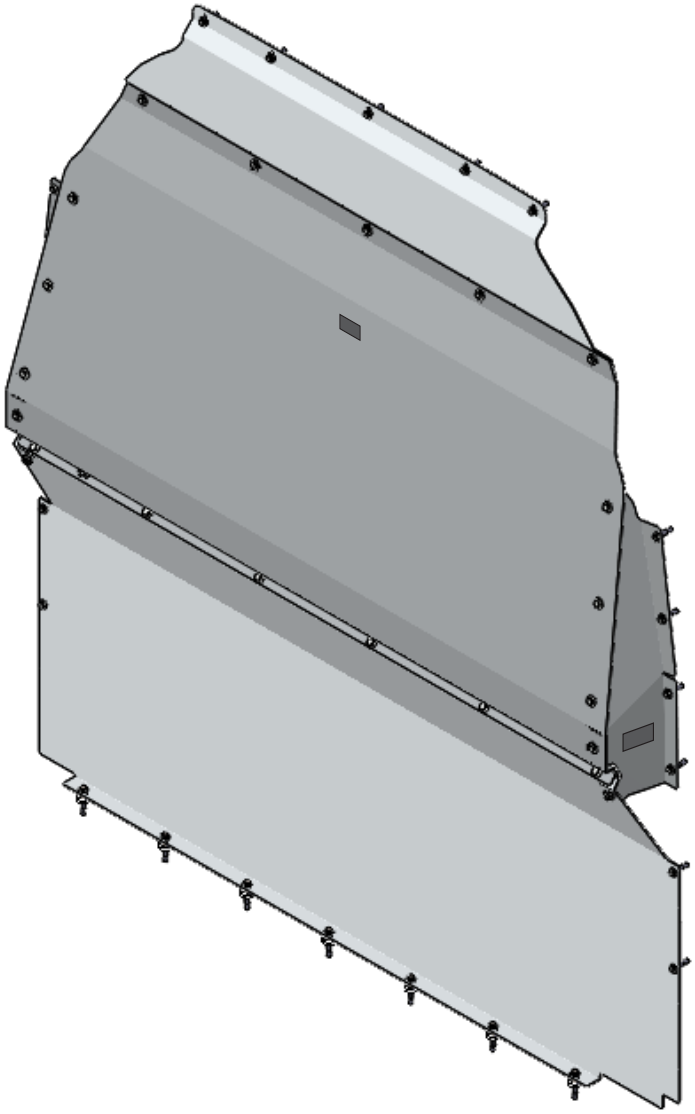

3010-DH CONTOURED PARTITION

Sprinter (Aluminum)

Scan the QR for the latest Install-Guide.

RANGER DESIGN

BEFORE YOU BEGIN

READ, UNDERSTAND, AND FOLLOW ALL WARNINGS AND INSTRUCTIONS BEFORE USING THIS PRODUCT. FAILURE TO FOLLOW THESE DIRECTIONS MAY RESULT IN PROPERTY DAMAGE, SERIOUS BODILY INJURY, AND/OR DEATH. RANGER DESIGN IS NOT RESPONSIBLE FOR ANY PROPERTY DAMAGE, PERSONAL INJURY, OR DEATH THAT OCCURRED WHILE USING ANY RANGER DESIGN PRODUCTS.

WARNING

- Failure to use Ranger Design-provided fasteners, brackets, and proper installation guidelines could increase risk of serious personal injury and/or death.
- If drilling is required to complete this installation: improper drilling can cause property damage to vehicles and could lead to electric shock, fire, or even death.
- If drilling is required to complete this installation: Ensure that drilling is only performed on areas of the vehicle allowed by the vehicle's Original Equipment Manufacturer's Body Builders Layout Book (or equivalent document).
- Prior to installation, inspect the vehicle to ensure that installation will not interfere with, or cause obstruction of, any critical components such as electrical wiring, fuel tanks, fuel-cells, locks, latches, etc.
- The installer or manufacturer is responsible for ensuring anchorages are installed onto suitable wall and floor structures; wall and floor strength must meet applicable performance requirements.
- Do not install systems into any weak or unsound materials such as plastics, woods, thin-walled metals, etc. without proper reinforcement.
- Do not install this product where it could interfere with the deployment of airbags. Failure to comply could result in death or serious injury.
- Do not install this product where it could ingress on the Transit Occupant Protection Zone. Failure to comply could result in death or serious injury.
- Incorrect installation could cause water leaks, electric shock or fire.
- Any cargo vehicle with any cargo or equipment should use a certified partition. See Ranger Design website for some partition options. (https://rangerdesign.com/)
- Mountings rails are recommended for any attachment to the vehicle walls.
- All items in the cargo area should be properly secured while the vehicle is in motion.
- Check your vehicle's tare weight and remaining load capacity with all the equipment installed. Never exceed the maximum Gross Vehicle Weight Rating (GVWR), Gross Axle Weight Ratings (GAWRs), or other maximum loads permitted by the vehicle's Original Equipment Manufacturer (OEM) and required by law.
- The heaviest items must be placed towards the bottom of the vehicle, while the lightest ones can be arranged upwards. Vehicle cargo loading weight proportion should follow the following guidelines:

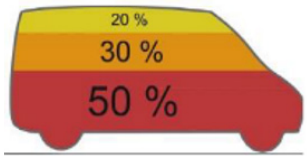

- The final alterer and/ or modifier should review the warning sheet with the customer before the vehicle is released to the customer or for general use.
- Any modification or unintended use of this product voids any warranty and could create a hazardous condition.
- Ranger Design provides recommended assembly and installation instructions which should be followed to ensure correct operation. Failure to do so could result in invalidating the product's compliance, warranty and cause injury. Notwithstanding, the final stage vehicle alterer and/or modifier is responsible for the integration, installation, and compliance of the product in its final location to all applicable regulations and standards. Failure to maintain compliance of the vehicle to applicable regulations and standards could be punishable by law. Alterers and/or modifiers should consult with all local authorities prior to commissioning.

CAUTION

- Drilling is required to complete this installation. Before drilling, ensure that you will not hit any critical parts of the vehicle like the gas tank, wiring harness, or hose. Consult the vehicle OEM documentation as necessary. When drilling, use a drill collar to reduce the risk of damage to the vehicle.
- Any materials, padding, or glazing installed in the vehicle must comply with FMVSS/CMVSS 201/205/302, as applicable.
- In the event of a motor vehicle accident or collision where a Ranger system has been installed, especially ones where the vehicle structure is damaged and/or the air bags deploy and/or the vehicle has been towed, the system must be inspected to ensure continued soundness and safety before returning the vehicle to service. Damaged components should be replaced as necessary.
- All system components should be regularly inspected, cleaned, and maintained pursuant to Ranger guidelines.

QUICK START GUIDE

Phase 1 - Assembly

- ❑ 1.1 Setup..... 4
- ❑ 1.2 Partition assembly..... 6

Phase 2 - Installation

- ❑ 2.1 Tips on how to attach a plusnut..... 8
- ❑ 2.2 Vehicle preparation..... 9
- ❑ 2.3 Contoured partition installation..... 10

REQUIRED ITEMS

- ❑ Cordless Impact
- ❑ Cordless Drill
- ❑ Cutter
- ❑ Mallet
- ❑ Marker
- ❑ Plusnut Tool
- ❑ Tape Measure
- ❑ 3/8" Drill Bit
- ❑ 7/16" Socket
- ❑ 1/2" Socket
- ❑ 9/16" Wrench
- ❑ 1" Hole Saw

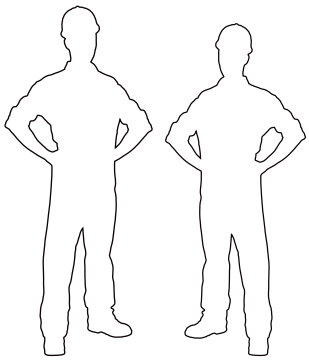

2 PERSONS

PHASE 1 – ASSEMBLY

1.1 SETUP

1.1.1 Unpack components; compare with the bill of materials.

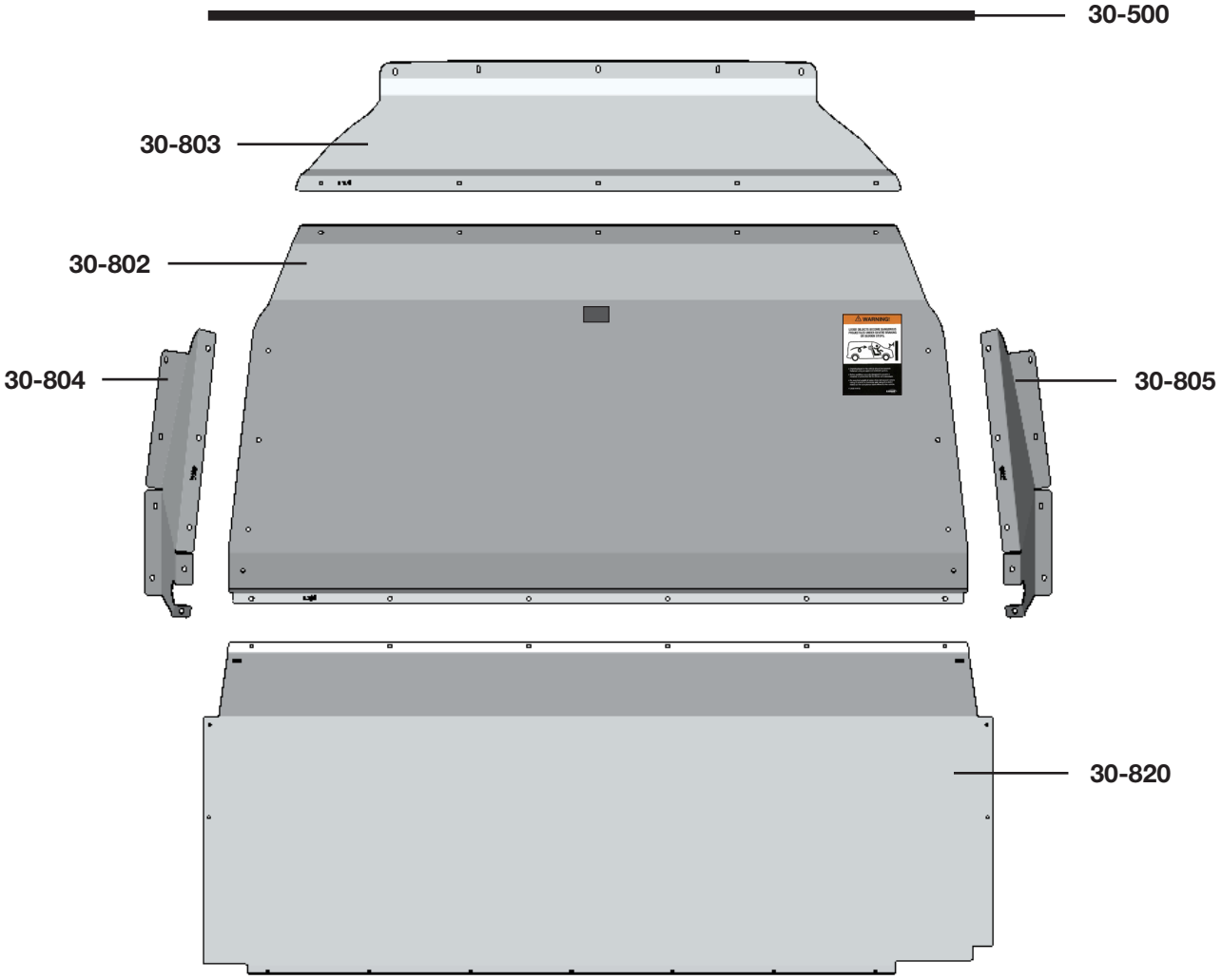

1.1.2 Verify all parts are present.

Item No.	Description	Qty.
30-500	Edge Trim (QTY in Inches)	92
30-802	Upper Panel	1
30-803	Top Panel	1
30-804	Driver Side Wing	1
30-805	Passenger Side Wing	1
30-820	Lower Panel	1
79-932	Bilingual Warning Label	1
94-3013	Assembly Fastener Bag	1
96-3008	Installation Fastener Bag	1

1.1.3 Identify the **Assembly** and **Installation** fastener bags.

Installation Fastener Bag → Hardware Assembly

5×		**# 90-114**	Hex Bolt 1/4"-20 × 1" GR-5 ZINC
7×		**# 90-130**	Hex Bolt 1/4"-20 × 2" GR-5 ZINC
6×		**# 90-983**	Double Ended Screw 1/4” - 20 UNC × 1.125" LONG ZINC
6×		**# 90-984**	Double Ended Screw 1/4” - 20 UNC × 1.750" LONG ZINC
12×		**# 94-100**	Hex Nut 1/4" - 20 ZINC
24×		**# 94-130**	Plusnut .250
24×		**# 98-112**	Flat Washer 1/4", 3/4" OD ZINC
24×		**# 98-118**	Lock Washer Regular 1/4" ZINC
21×		**# 98-157**	Spacer 0.375" ID, × 1.0" OD × 0.25" L NYLON
6×		**# 98-180**	Partition Spacer 0.688" LONG NYLON, BLACK
6×		**# 98-181**	Partition Spacer 1.250" LONG NYLON, BLACK

5×

#90-114 Hex Bolt 1/4" × 1"
#98-118 Lock Washer
#98-112 Flat Washer
#94-130 Plusnut .250

7×

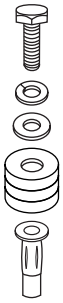

#90-130 Hex Bolt 1/4" × 2"
#98-118 Lock Washer
#98-112 Flat Washer
#98-157 Spacers (3)
#94-130 Plusnut .250

6×

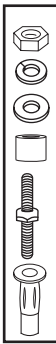

#94-100 Hex Nut 1/4” - 20
#98-118 Lock Washer
#98-112 Flat Washer
#98-181 Long Partition Spacer
#90-984 Long Double Ended Bolt
#94-130 Plusnut

6×

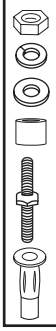

#94-100 Hex Nut 1/4” - 20
#98-118 Lock Washer
#98-112 Flat Washer
#98-180 Short Partition Spacer
#90-983 Short Double Ended Bolt
#94-130 Plusnut

Assembly Fastener Bag → Hardware Assembly

21× **# 90-204** Hex Bolt 5/16"-18 × 3/4" GR-5 ZINC

21× **# 94-116** Serrated Nut 5/16"-18 ZINC

21× **# 98-116** Flat Washer 5/16", 7/8" OD ZINC

21×

- #90-204 Hex Bolt 5/16" × 3/4"
- #98-116 Flat Washer
- #94-116 Serrated Nut

PHASE 1 – ASSEMBLY

1.2 PARTITION ASSEMBLY

1.2.1 Remove all the PVC from all the parts, then attach top panel to the upper panel.

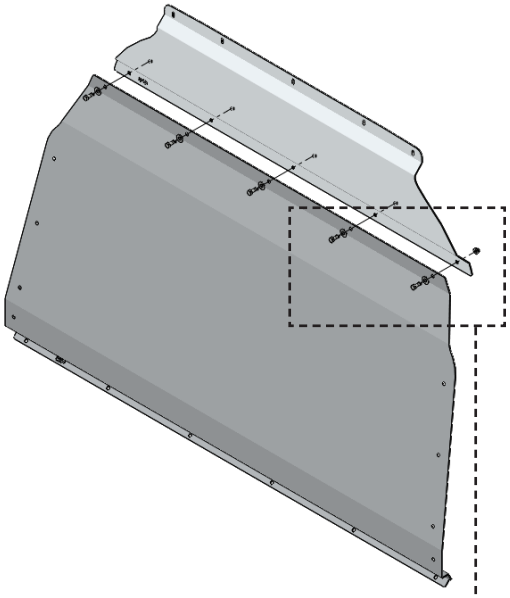

TOOLS
- ❑ Cordless Impact
- ❑ 1/2" Socket

HARDWARE USED
5×

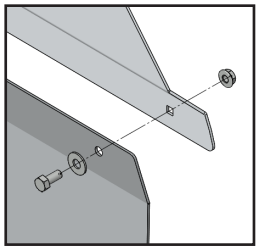

- #90-204 Hex Bolt 5/16" × 3/4"
- #98-116 Flat Washer
- #94-116 Serrated Nut

1.2.2 Attach the upper panel to the lower panel.

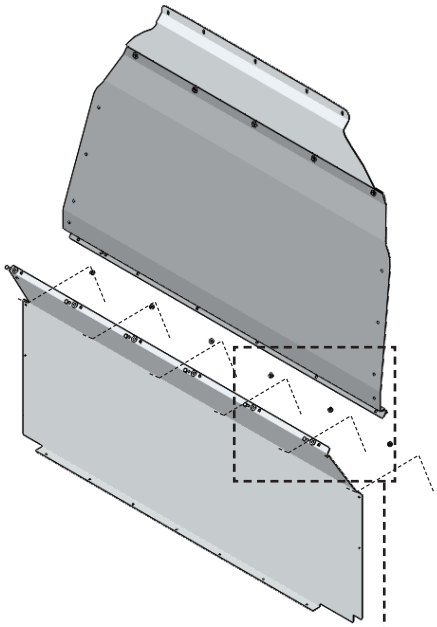

TOOLS
- ❑ Cordless Impact
- ❑ 1/2" Socket

HARDWARE USED
6×

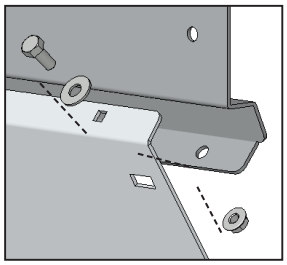

- #90-204 Hex Bolt 5/16" × 3/4"
- #98-116 Flat Washer
- #94-116 Serrated Nut

1.2.3 Attach both wings to the upper and lower panels.

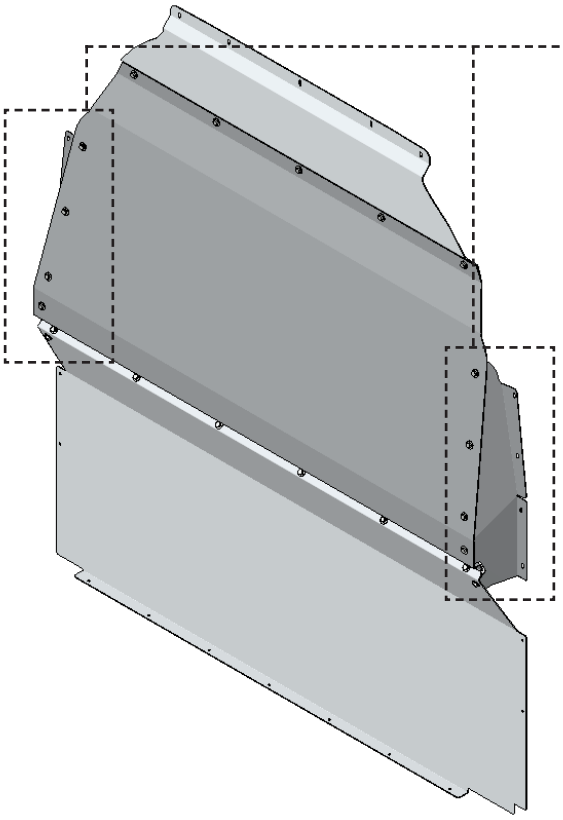

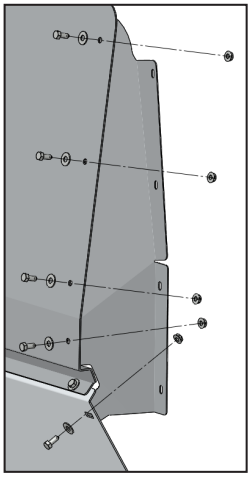

TOOLS

- ❑ Cordless Impact
- ❑ 1/2" Socket

HARDWARE USED

10×

#90-204 Hex Bolt	5/16" × 3/4"
#98-116 Flat Washer	
#94-116 Serrated Nut	

1.2.4 Attach the edge trims along both sides of the upper and lower panels.

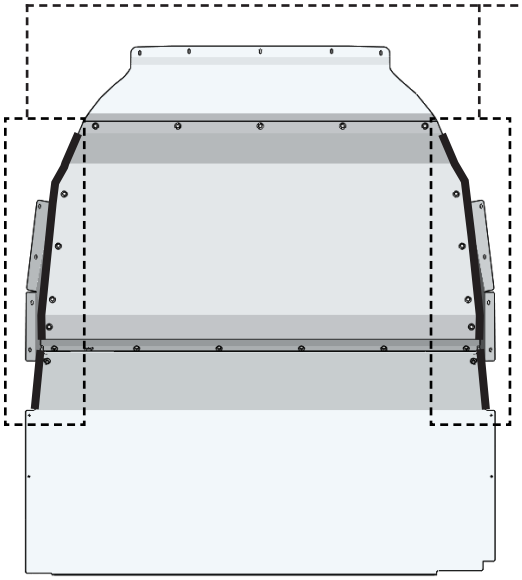

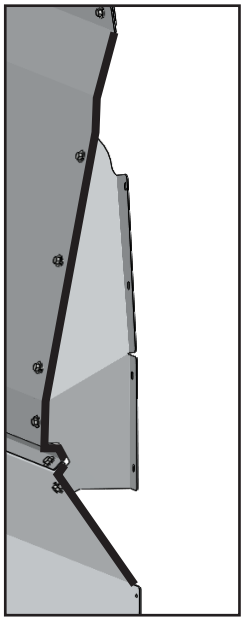

TOOLS

- ❑ Mallet
- ❑ Cutter

PHASE 2 – INSTALLATION

2.1 TIPS ON HOW TO ATTACH A PLUSNUT

2.1.1 Attach the plusnut using the plusnut gun.

TIPS: Put the plusnut on the plusnut gun, then attach the plusnut in the hole by turning the gun forward until the plusnut locks, then remove the gun by turning in reverse.

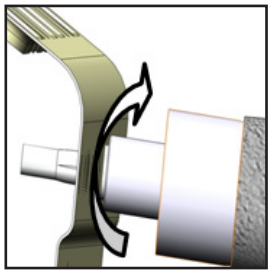

FORWARD

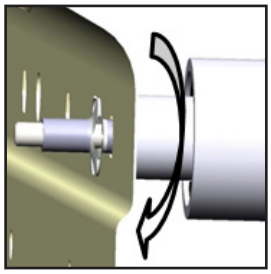

REVERSE

2.1.2 Attach the plusnut using the 6490 plusnut tool.

NOTE: The hardware used for the 6490 plusnut tool is not included in the fastener bag.
The 6490 plusnut tool can be ordered separately upon demand at no charge.

6490

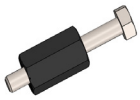

HARDWARE USED

- Flat washer 1/4"
- Flat washer 1/4" BS × 3/4" OD

TOOLS

- ❑ Cordless Impact
- ❑ 7/16" Socket
- ❑ 9/16" Wrench

TIPS STEP 1:
Assemble the 6490 plusnut tool with the hardware needed, plusnut and the 9/16" wrench as shown.

TIPS STEP 2:
Attach the plusnut in the hole by turning the bolt forward using an impact with a 7/16" socket until the plusnut locks, then remove the bolt by turning the impact in reverse.

FORWARD

REVERSE

PHASE 2 – INSTALLATION

2.2 VEHICLE PREPARATION

2.2.1 Attaching plusnuts.

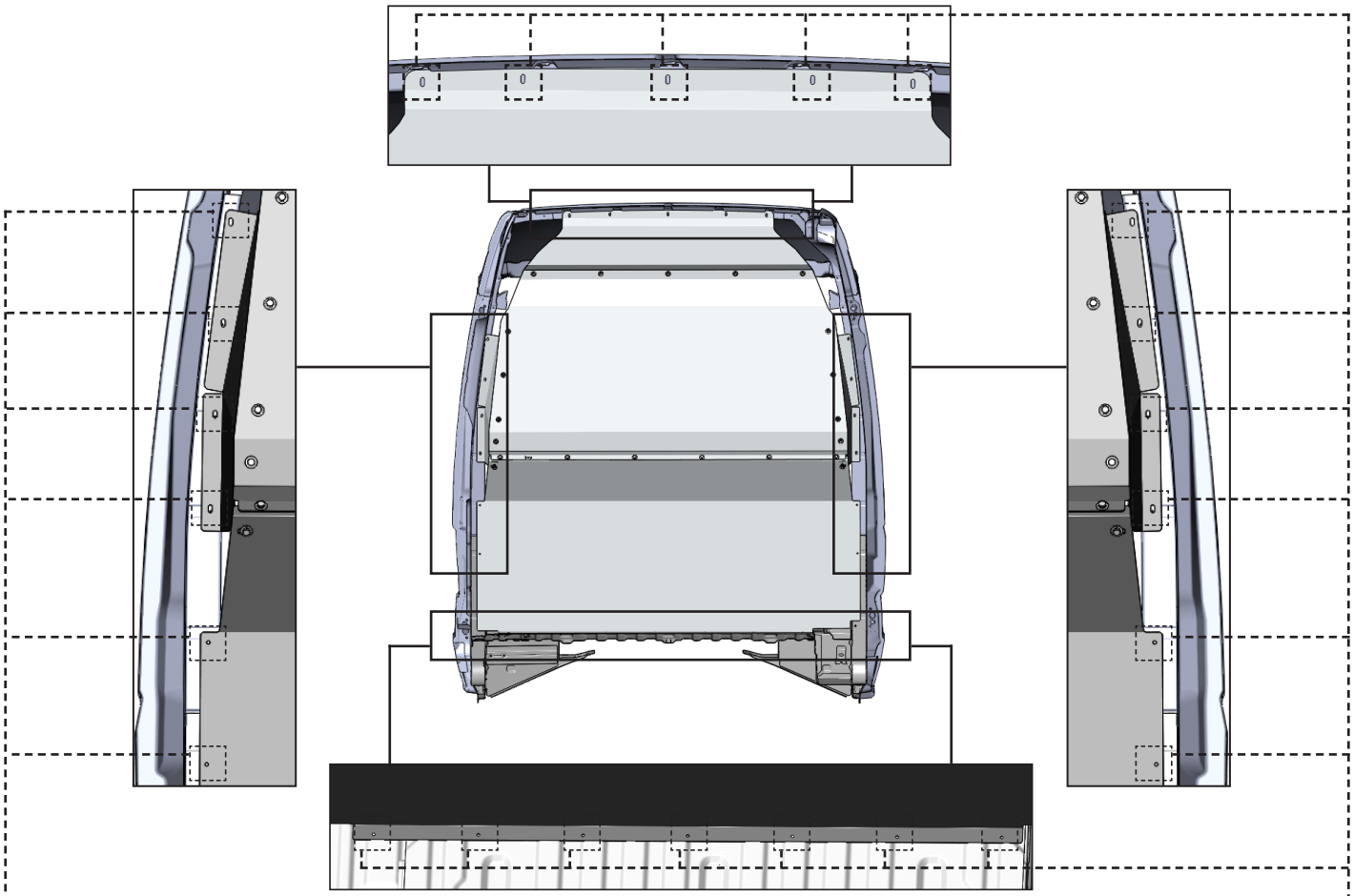

Put the assembled partition in place, then mark all the holes through the van.

NOTE:
- For the B-pilar plastic cover and wood floor use 1" hole saw to drill a hole in the B-pilar plastic cover or wood floor, then drill 3/8" hole in the van.
- Enlarge all the holes in the van that align with the holes of the partiton using 3/8” drill bit or step drill.

TOOLS

❑ Cordless Drill ❑ 3/8” Drill Bit or Step Drill ❑ 1" Hole Saw

Attach a plusnuts in the holes.

TOOLS

❑ Plusnut Tool

HARDWARE USED

24×

94-130
Plusnut .250

PHASE 2 – INSTALLATION

2.3 CONTOURED PARTITION INSTALLATION

NOTE: If the plastic partition trim is not installed around the b-pillars, then omit the spacers during the installation steps.

2.3.1 Bolt both sides of the partition in the van.

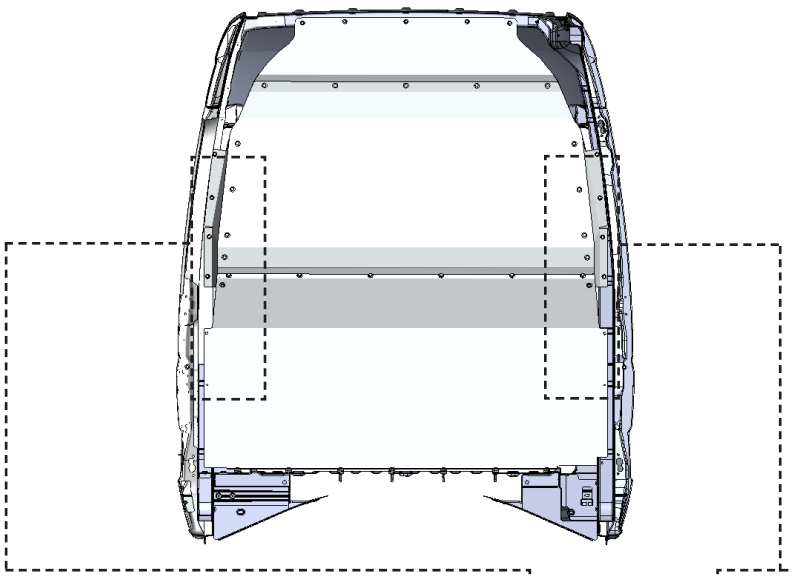

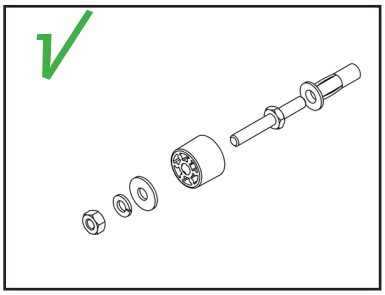

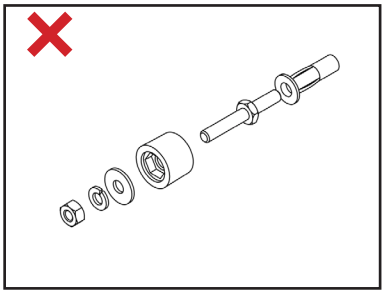

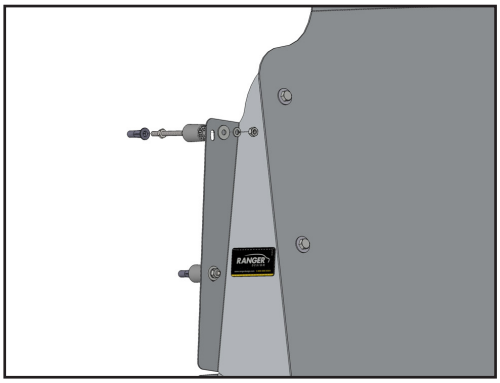

TOOLS

- ❑ Cordless Impact
- ❑ 7/16" Socket

HARDWARE USED

6×

- #94-100 Hex Nut 1/4” - 20
- #98-118 Lock Washer
- #98-112 Flat Washer
- #98-181 Long Partition Spacer
- #90-984 Long Double Ended Bolt
- #94-130 Plusnut

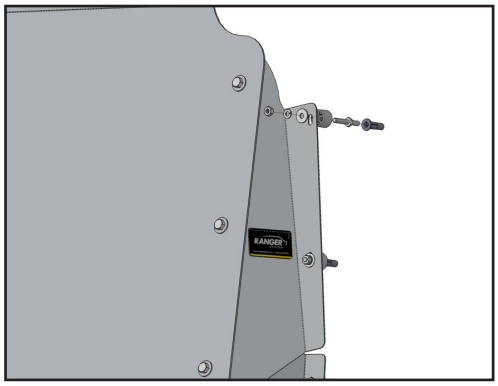

TOOLS

- ❑ Cordless Impact
- ❑ 7/16" Socket

HARDWARE USED

6×

- #94-100 Hex Nut 1/4” - 20
- #98-118 Lock Washer
- #98-112 Flat Washer
- #98-180 Short Partition Spacer
- #90-983 Short Double Ended Bolt
- #94-130 Plusnut

2.3.2 Attach the upper panel and lower panel to the van.

NOTE: Use spacers to make the floor level, if you have a rubber or wood floor use 2 to 3 spacers to make the floor level.

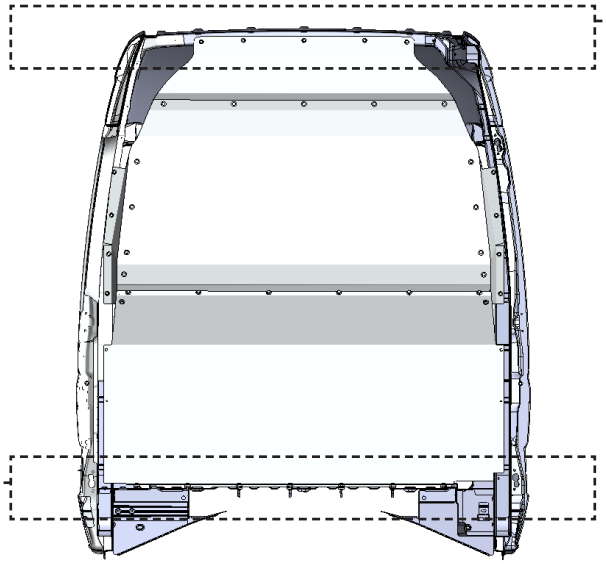

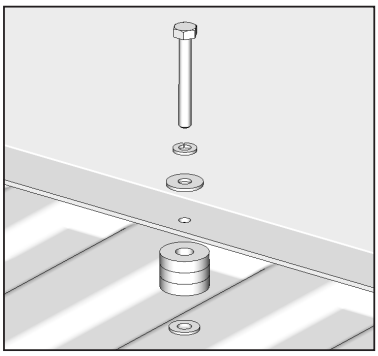

TOOLS

- ❑ Cordless Impact
- ❑ 7/16" Socket

HARDWARE USED

7×

- #90-130 Hex Bolt 1/4" × 2"
- #98-118 Lock Washer
- #98-112 Flat Washer
- #98-157 Spacers (3)

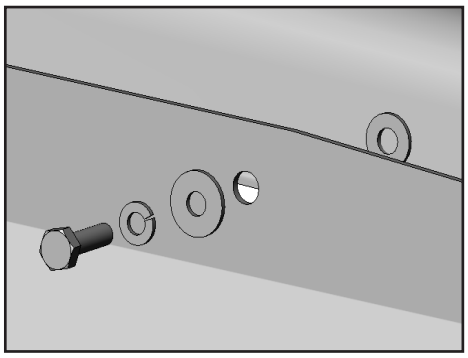

TOOLS

- ❑ Cordless Impact
- ❑ 7/16" Socket

HARDWARE USED

5×

- #90-114 Hex Bolt 1/4" × 1"
- #98-118 Lock Washer
- #98-112 Flat Washer

2.3.3 Apply the warning label on the upper panel.

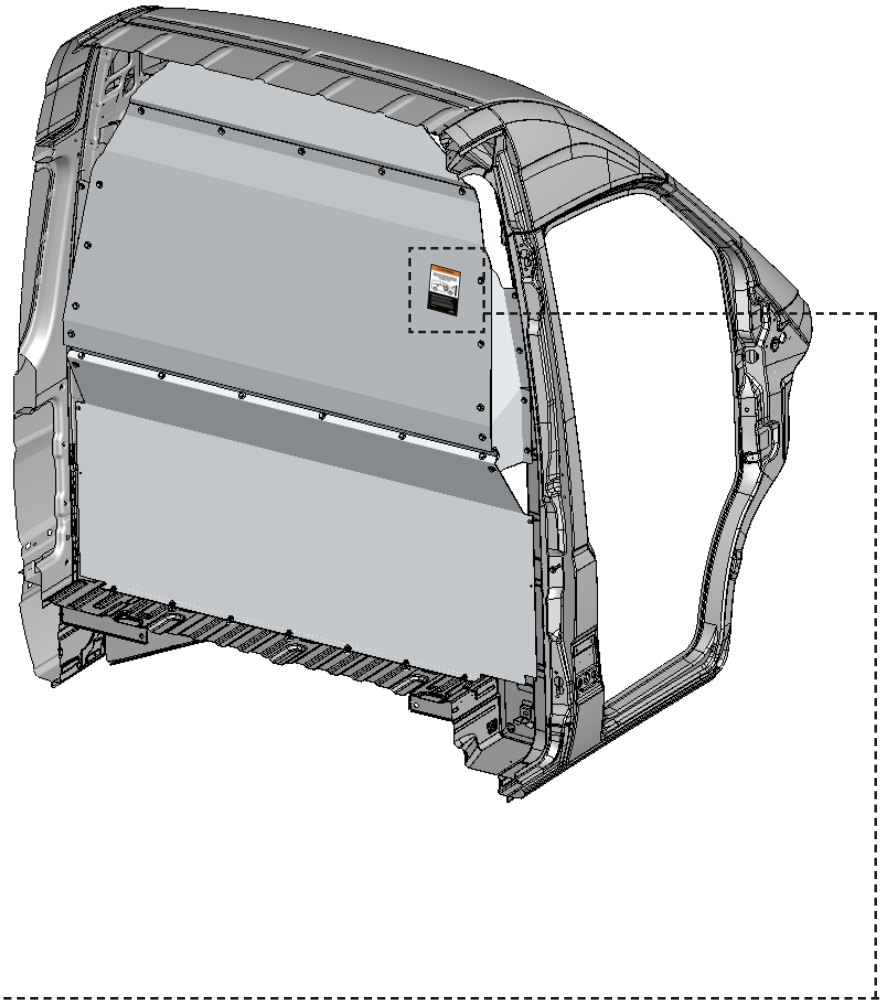

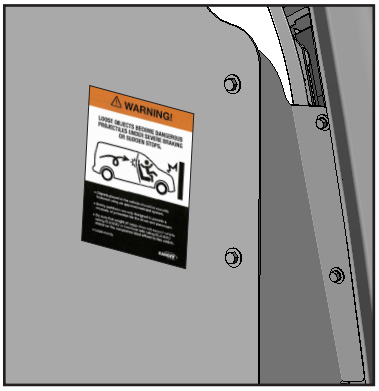

NOTE: English warning label is already attached on the passenger side panel.

"You have successfully installed your contoured partition,
Thank you for doing business with us."

For any feedback or suggestions, you may have, please contact: cs@rangerdesign.com