INSTALLATION GUIDE

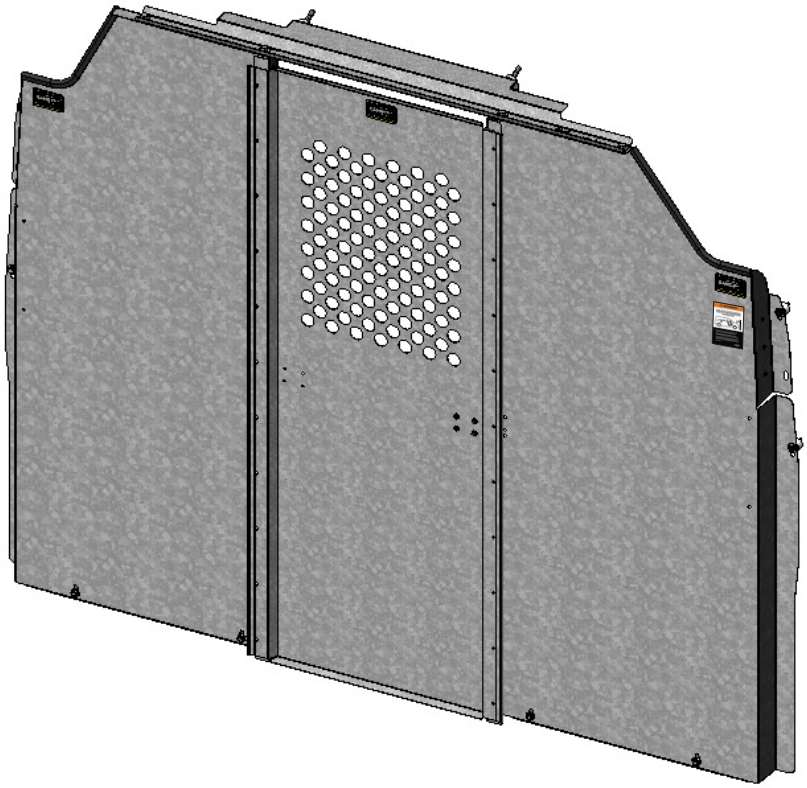

C30-FTL STRAIGHT PARTITION

Transit Partition (Perforated Window, Swing Door, Steel)

For more information, visit rangerdesign.com

RANGER DESIGN

BEFORE YOU BEGIN

READ, UNDERSTAND, AND FOLLOW ALL WARNINGS AND INSTRUCTIONS BEFORE USING THIS PRODUCT. FAILURE TO FOLLOW THESE DIRECTIONS MAY RESULT IN PROPERTY DAMAGE, SERIOUS BODILY INJURY, AND/OR DEATH. RANGER DESIGN IS NOT RESPONSIBLE FOR ANY PROPERTY DAMAGE, PERSONAL INJURY, OR DEATH THAT OCCURRED WHILE USING ANY RANGER DESIGN PRODUCTS.

WARNING

- Failure to use Ranger Design-provided fasteners, brackets, and proper installation guidelines could increase risk of serious personal injury and/or death.
- If drilling is required to complete this installation: improper drilling can cause property damage to vehicles and could lead to electric shock, fire, or even death.
- If drilling is required to complete this installation: Ensure that drilling is only performed on areas of the vehicle allowed by the vehicle's Original Equipment Manufacturer's Body Builders Layout Book (or equivalent document).
- Prior to installation, inspect the vehicle to ensure that installation will not interfere with, or cause obstruction of, any critical components such as electrical wiring, fuel tanks, fuel-cells, locks, latches, etc.
- The installer or manufacturer is responsible for ensuring anchorages are installed onto suitable wall and floor structures; wall and floor strength must meet applicable performance requirements.
- Do not install systems into any weak or unsound materials such as plastics, woods, thin-walled metals, etc. without proper reinforcement.
- Do not install this product where it could interfere with the deployment of airbags. Failure to comply could result in death or serious injury.
- Do not install this product where it could ingress on the Transit Occupant Protection Zone. Failure to comply could result in death or serious injury.
- Incorrect installation could cause water leaks, electric shock or fire.
- Any cargo vehicle with any cargo or equipment should use a certified partition. See Ranger Design website for some partition options. (https://rangerdesign.com/)
- Mountings rails are recommended for any attachment to the vehicle walls.
- All items in the cargo area should be properly secured and partition doors closed while the vehicle is in motion.
- Check your vehicle's tare weight and remaining load capacity with all the equipment installed. Never exceed the maximum Gross Vehicle Weight Rating (GVWR), Gross Axle Weight Ratings (GAWRs), or other maximum loads permitted by the vehicle's Original Equipment Manufacturer (OEM) and required by law.
- The heaviest items must be placed towards the bottom of the vehicle, while the lightest ones can be arranged upwards. Vehicle cargo loading weight proportion should follow the following guidelines:

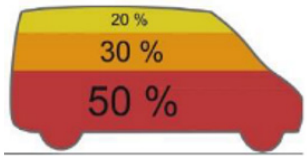

- The final alterer and/ or modifier should review the warning sheet with the customer before the vehicle is released to the customer or for general use. These instructions should remain with the vehicles a all times.
- Any modification or unintended use of this product voids any warranty and could create a hazardous condition.
- Ranger Design provides recommended assembly and installation instructions which should be followed to ensure correct operation. Failure to do so could result in invalidating the product's compliance, warranty and cause injury. Notwithstanding, the final stage vehicle alterer and/or modifier is responsible for the integration, installation, and compliance of the product in its final location to all applicable regulations and standards. Failure to maintain compliance of the vehicle to applicable regulations and standards could be punishable by law. Alterers and/or modifiers should consult with all local authorities prior to commissioning.

CAUTION

- Drilling is required to complete this installation. Before drilling, ensure that you will not hit any critical parts of the vehicle like the gas tank, wiring harness, or hose. Consult the vehicle OEM documentation as necessary. When drilling, use a drill collar to reduce the risk of damage to the vehicle.
- Any materials, padding, or glazing installed in the vehicle must comply with FMVSS/CMVSS 201/205/302, as applicable.
- In the event of a motor vehicle accident or collision where a Ranger system has been installed, especially ones where the vehicle structure is damaged and/or the air bags deploy and/or the vehicle has been towed, the system must be inspected to ensure continued soundness and safety before returning the vehicle to service. Damaged components should be replaced as necessary.
- All system components should be regularly inspected, cleaned, and maintained pursuant to Ranger guidelines.

QUICK START GUIDE

Phase 1 - Assembly

- ❑ 1.1 Setup..... 4
- ❑ 1.2 Partition Assembly..... 6

Phase 2 - Installation

- ❑ 2.1 Tips On How To Attach a Plusnut..... 7
- ❑ 2.2 Vehicle Preparation..... 8
- ❑ 2.3 Swing Door Partition Installation..... 11

REQUIRED ITEMS

- ❑ Cordless Impact
- ❑ Cordless Drill
- ❑ Cutter
- ❑ Flat Screwdriver
- ❑ Mallet
- ❑ Marker
- ❑ Plusnut Tool
- ❑ Socket Wrench
- ❑ Tape Measure
- ❑ 3/8" Drill Bit
- ❑ 7/16" Socket
- ❑ 1/2" Socket
- ❑ 9/16" Wrench
- ❑ 1" & 1 - 3/8" Hole Saw
- ❑ 10mm Socket
- ❑ 13mm Socket
- ❑ T50 Torx Bit

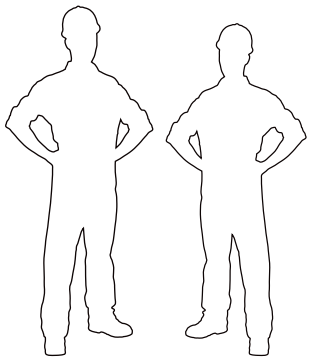

2 PERSONS

PHASE 1 – ASSEMBLY

1.1 SETUP

1.1.1 Unpack components; compare with the bill of materials.

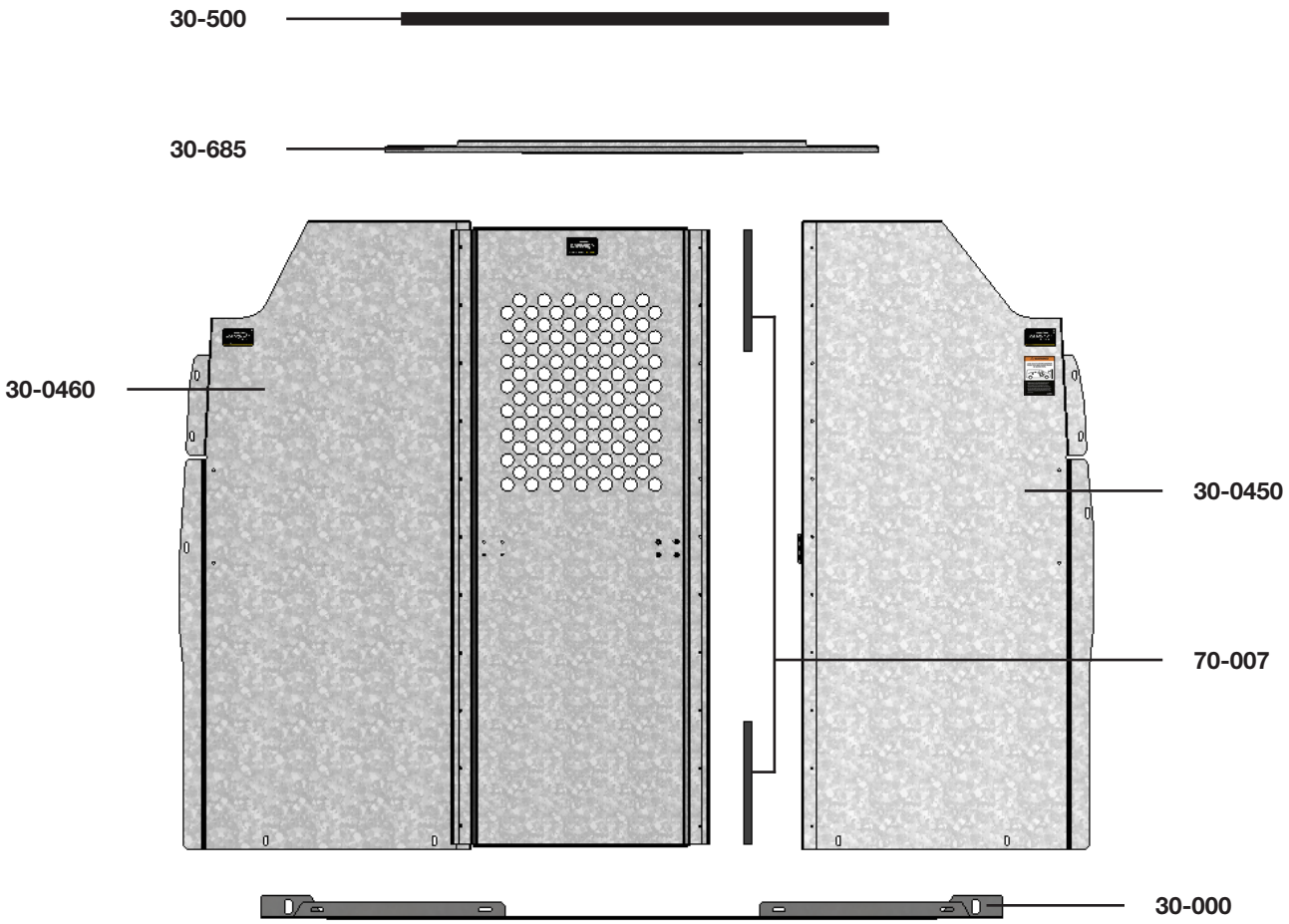

1.1.2 Verify all parts are present.

Item No.	Description	Qty.
30-000	Floor Bracket	1
30-500	Edge Trim (QTY in Inches)	36
30-685	Top Alignment Bar	1
70-007	Foam Tape (QTY in Inches)	10
79-932	Warning Label (Bilingual)	1
30-0450	Passenger Side Panel	1
30-0460	Driver Side Panel w/ Swing Door	1
94-3007	Assembly Fastener Bag	1
96-3033	Installation Fastener Bag	1

1.1.3 Identify the **96-3033** and **94-3007** fastener kits.

96-3033 Fastener Kit → Fastener Assembly

2×		**# 90-010**	Screw, Torx 7/16"-20 × 1" GR-10.9 ALLOY STL
2×		**# 90-114**	Hex Bolt 1/4"-20 × 1" ZINC
2×		**# 90-130**	Hex Bolt 1/4"-20 × 2" ZINC
2×		**# 90-836**	Hex Bolt M6-1.00 × 40mm BLACK OXIDE
4×		**# 94-130**	Plusnut .250
6×		**# 98-112**	Flat Washer 1/4", 3/4" OD ZINC
6×		**# 98-118**	Lock Washer Regular 1/4" ZINC
2×		**# 98-141**	Square Flat Washer 7/16" ID, × 1"
2×		**# 98-157**	Spacer 0.375" ID, × 1.0" OD × 0.25" LONG NYLON
4×		**# 98-158**	Retaining Washer M16 (1/4") NYLON
4×		**# 98-161**	Spacer 1.0 × .625 × .375 NYLON

2×

- #90-114 Hex Bolt 1/4" × 1"
- #98-118 Lock Washer
- #98-112 Flat Washer
- #98-157 Spacers
- #94-130 Plusnut .250

2×

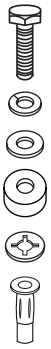

- #90-130 Hex Bolt 1/4" × 2"
- #98-118 Lock Washer
- #98-112 Flat Washer
- #98-161 Spacers
- #98-158 Retaining Washer
- #94-130 Plusnut .250

2×

- #90-836 Hex Bolt M6 × 40
- #98-118 Lock Washer
- #98-112 Flat Washer
- #98-161 Spacers
- #98-158 Retaining Washer

2×

- #90-010 Screw, Torx 7/16" × 1"
- #98-141 Square Flat Washer

94-3007 Fastener Kit → **Fastener Assembly**

4×		**# 90-200**	Hex Bolt 5/16"-18 × 1/2" GR-5 ZINC
4×		**# 90-482**	Carriage Bolt 5/16"-18 × 1/2" ZINC
8×		**# 94-116**	Serrated Nut 5/16"-18 ZINC
4×		**# 98-116**	Flat Washer 5/16", 7/8" OD ZINC

4×

#90-200 Hex Bolt 5/16" × 1/2"

#98-116 Flat Washer

#94-116 Serrated Nut

4×

#90-482 Carriage Bolt 5/16" × 1/2"

#94-116 Serrated Nut

PHASE 1 – ASSEMBLY

1.2 PARTITION ASSEMBLY

1.2.1 Remove all the PVC from all the parts, then attach 5" foam tapes on the top and bottom of the door panel and attach edge trims on the driver and passenger side panels.

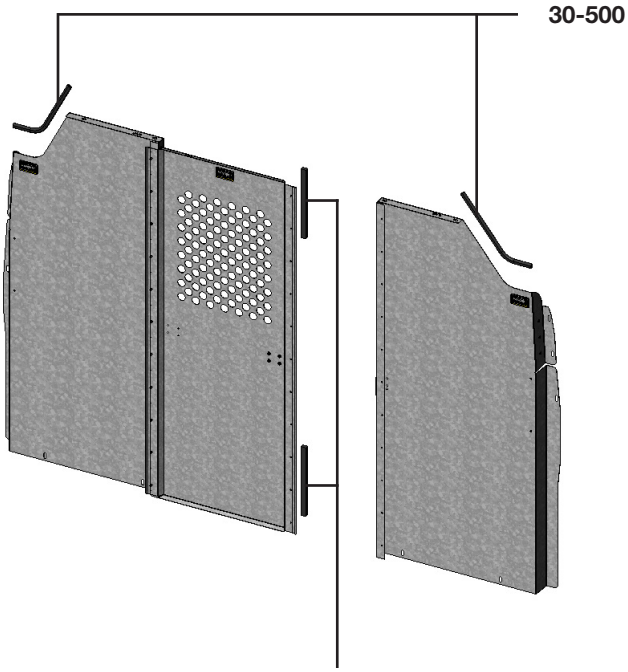

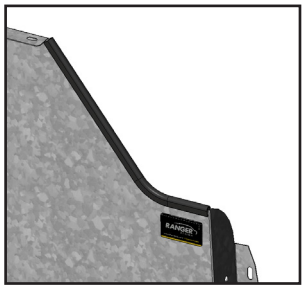

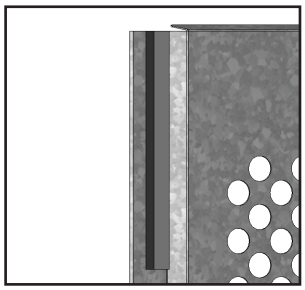

TOOLS
- ❑ Mallet
- ❑ Cutter

PHASE 2 – INSTALLATION

2.1 TIPS ON HOW TO ATTACH A PLUSNUT

2.1.1 Attach the plusnut using the plusnut gun.

TIPS: Put the plusnut on the plusnut gun, then attach the plusnut in the hole by turning the gun forward until the plusnut locks, then remove the gun by turning in reverse.

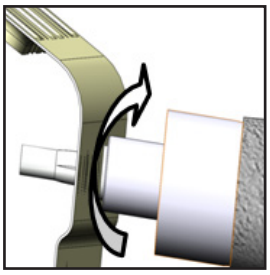

FORWARD

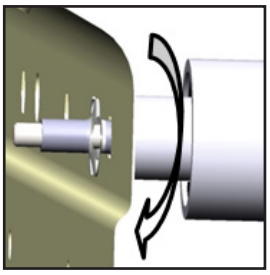

REVERSE

2.1.2 Attach the plusnut using the 6490 plusnut tool.

NOTE: The hardware used for the 6490 plusnut tool is not included in the fastener bag. The 6490 plusnut tool can be ordered separately upon demand at no charge.

6490

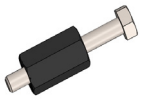

HARDWARE USED

- Flat washer 1/4"
- Flat washer 1/4" BS × 3/4" OD

TOOLS

- ❑ Cordless Impact
- ❑ 7/16" Socket
- ❑ 9/16" Wrench

TIPS STEP 1:
Assemble the 6490 plusnut tool with the hardware needed, plusnut and the 9/16" wrench as shown.

TIPS STEP 2:
Attach the plusnut in the hole by turning the bolt forward using an impact with a 7/16" socket until the plusnut locks, then remove the bolt by turning the impact in reverse.

FORWARD

REVERSE

PHASE 2 – INSTALLATION

2.2 VEHICLE PREPARATION

2.2.1 Driver and passenger sides preparation.

NOTE: This partition is design w/ floor make a new holes in the van if the holes is not align in the holes of the panels.

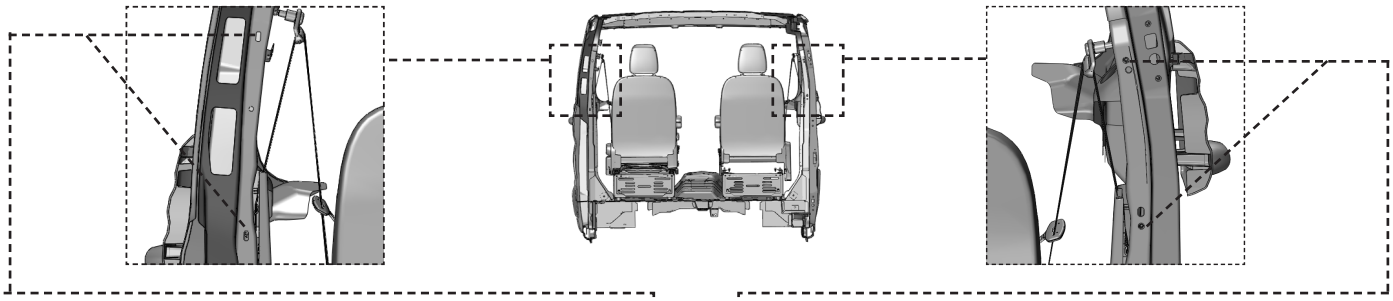

Put a mark on the plastic over these 2 holes.

TOOLS
- ❑ Marker

Use 1" hole saw to drill through the plastic cover over these two factory holes.

TOOLS
- ❑ 1" Hole Saw
- ❑ Cordless Drill

Use 3/8" drill to enlarge the bottom part of these two factory holes.

TOOLS
- ❑ Drill Collar Set at 1/2"
- ❑ Cordless Drill
- ❑ 3/8" Drill Bit

Attach plusnuts on the two factory holes.

TOOLS
- ❑ Plusnut Tool

HARDWARE USED

2×

 # 94-130
Plusnut .250

Remove the factory handle in the van.

TOOLS
- ❑ Flat Screwdriver
- ❑ Cordless Impact
- ❑ 10mm Socket

After removing the handle, pull the rubber out, then remove the bracket by removing the (3) bolts. 2 visible and 1 hidden behind the trim.

TOOLS
- ❑ Cordless Impact
- ❑ 10mm Socket

Put a mark on the plastic over the 2 threaded holes.

TOOLS
- ❑ Marker

Gently pull the plastic b-pillar from the metal. Use a 1" hole saw to drill through the plastic cover over these two factory threaded holes. (Use caution not to damage the threaded holes).

TOOLS
- ❑ 1" Hole Saw
- ❑ Cordless Drill

2.2.2 Put marks on the headliner over OEM holes, then use 1-3/8" hole saw running in reverse to cut holes in headliner.

NOTE: Don't pull the headliner down to avoid wrinkle.

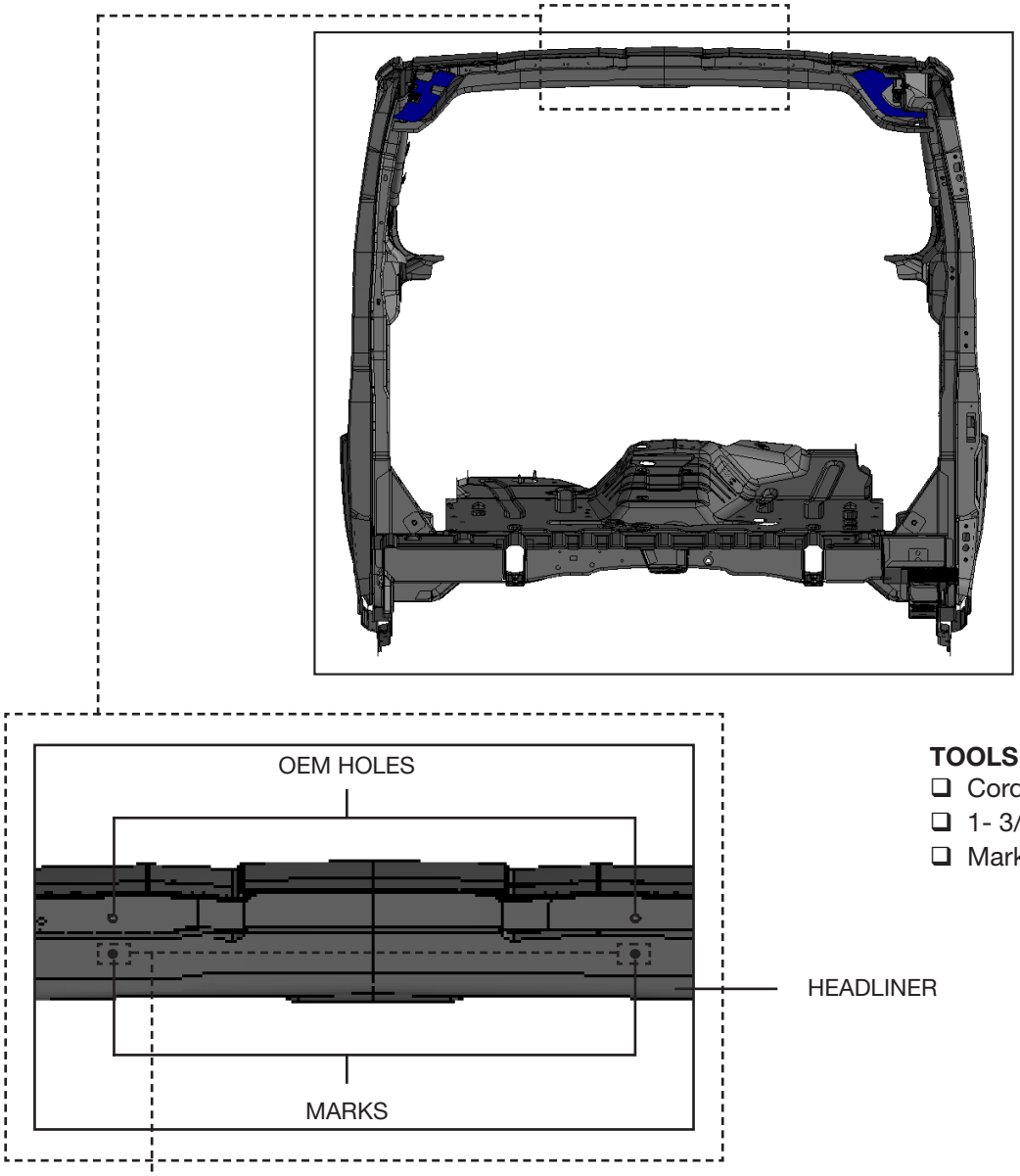

TOOLS

- ❑ Cordless Drill
- ❑ 1- 3/8" Hole Saw
- ❑ Marker

2.2.3 Attach plus nuts to the two center holes on the roof rim, enlarge the holes if needed.

NOTE: Don't pull the headliner down to avoid wrinkle.

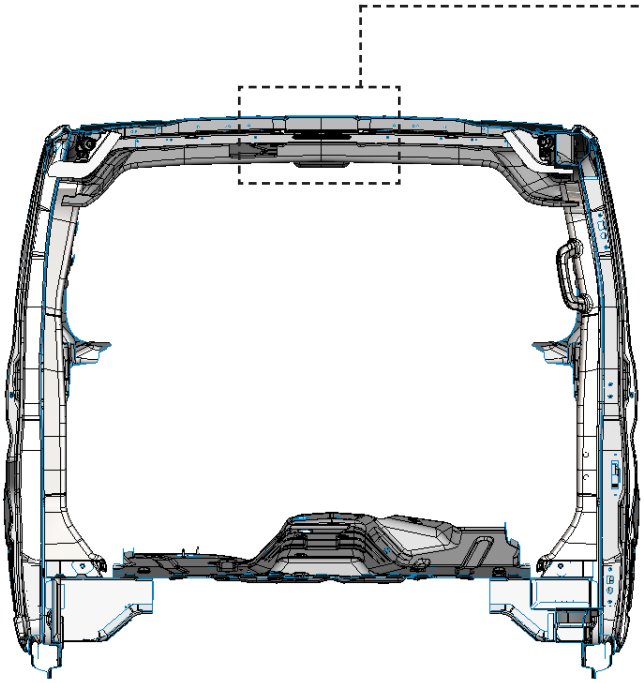

TOOLS

- ❑ Plusnut Tool

HARDWARE USED

2×

 # 94-130 Plusnut .250

2.2.4 Floor preparation.

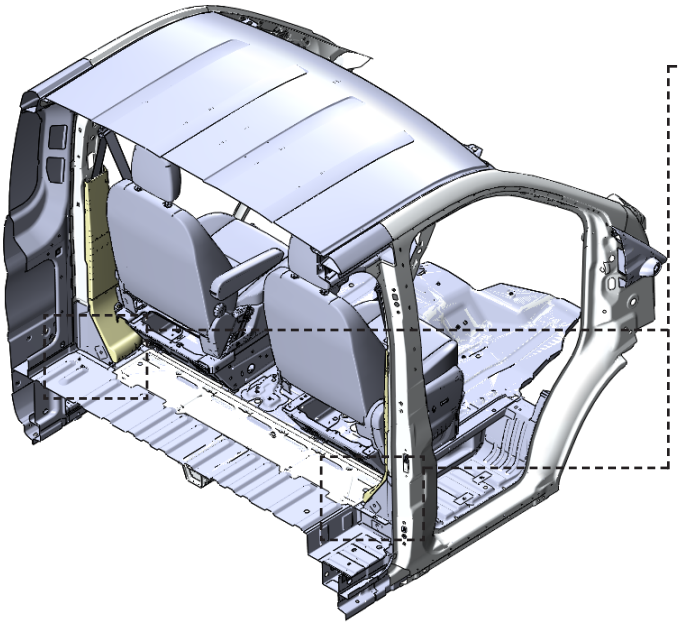

Remove the two D-rings in the floor, for re-use.

TOOLS

- ❑ Cordless Impact
- ❑ 13mm Socket

PHASE 2 – INSTALLATION

2.3 SWING DOOR PARTITION INSTALLATION

2.3.1 Floor bracket installation.

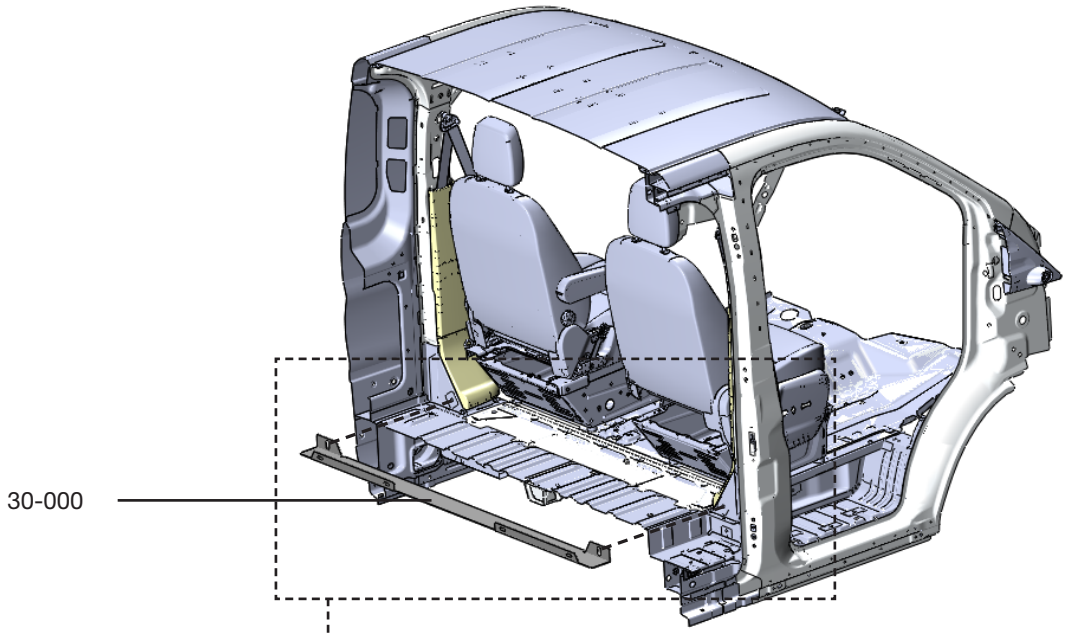

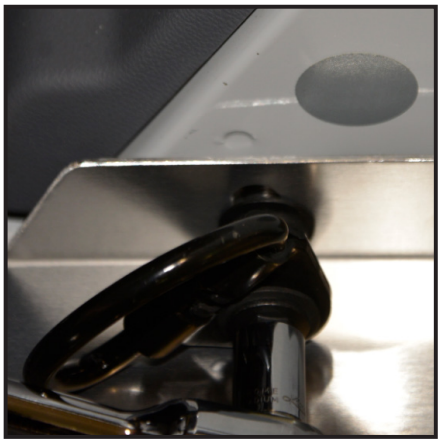

Attach the floor bracket to the floor re-using the 2 D-ring bolts with the addition of the square washers, in between the D-rings and floor bracket.
Note: Use 90-010 if D-rings are not available.

TOOLS
- ❑ Socket Wrench
- ❑ 13mm Socket
- ❑ T50 Torx Bit

HARDWARE USED

2×

2×

#90-010 Screw, Torx 7/16" × 1"

#98-141 Square Flat Washer

2.3.2 Install ta top alignment bar to the vehicle.

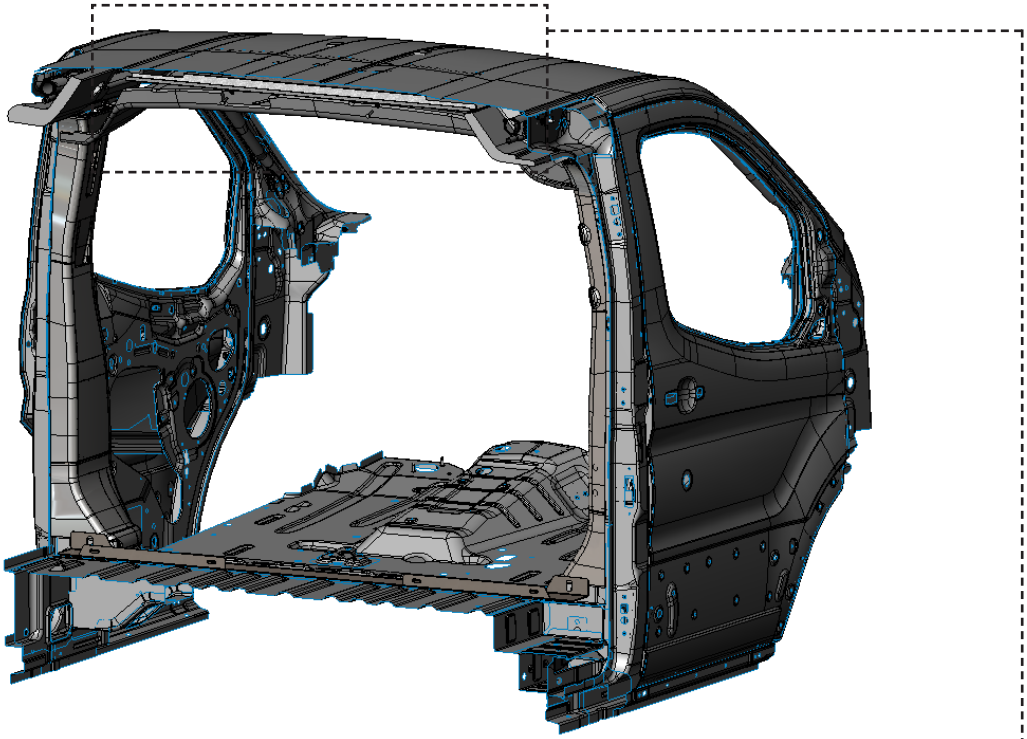

30-685

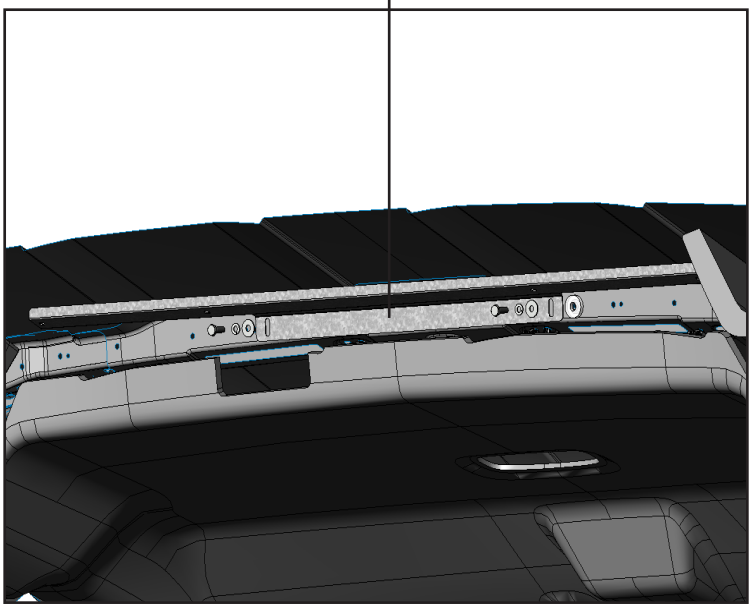

TOOLS

- ❑ Cordless Impact
- ❑ 7/16" Socket

HARDWARE USED

2×

- #90-114 Hex Bolt 1/4" × 2"
- #98-118 Lock Washer
- #98-112 Flat Washer
- #98-157 Spacers
- #94-130 Plusnut (Already Installed)

2.3.3 Attach the driver side panel w/ swing door to the van.

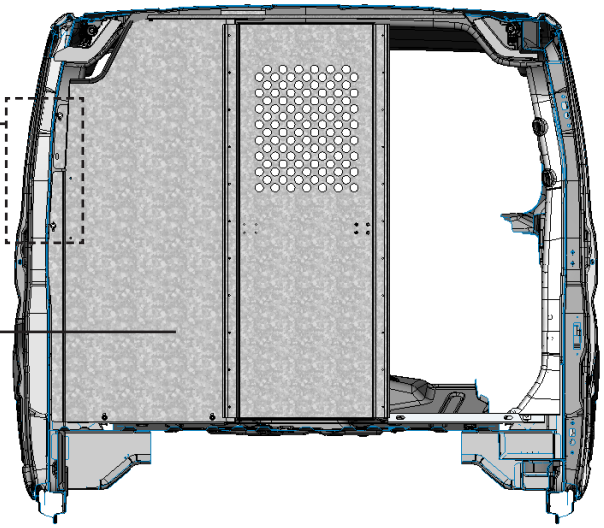

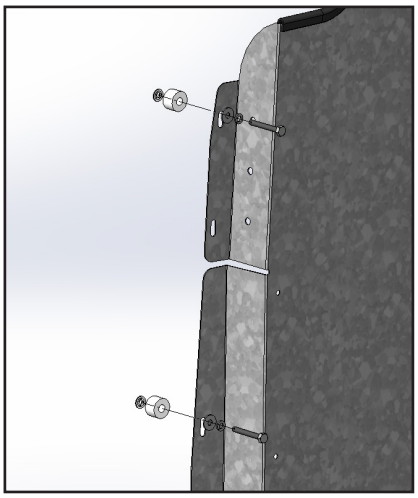

Put bolt, lock washer, flat washer, spacer and a retaining washer in the 1st and 3rd holes of the driver panel.

HARDWARE USED

2×

	#90-130 Hex Bolt 1/4" × 2"
	#98-118 Lock Washer
	#98-112 Flat Washer
	#98-161 Spacers
	#98-158 Retaining Washer

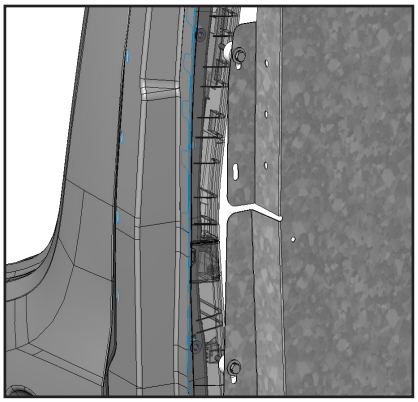

Attach the driver panel using the 2 hex bolts into 2 plusnuts.

TOOLS

- ❑ Cordless Impact
- ❑ 7/16" Socket

2.3.4 Attach the passenger side panel to the van.

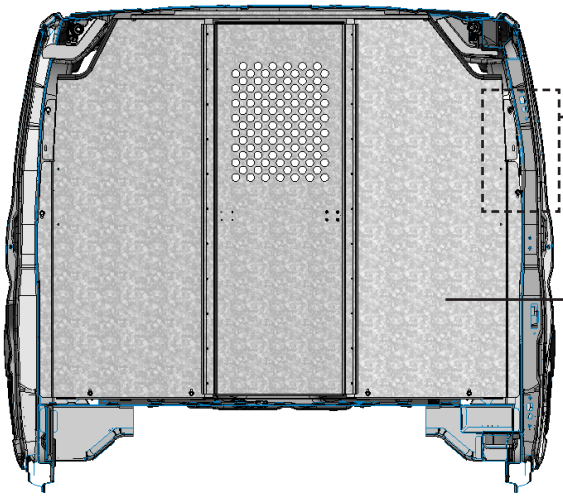

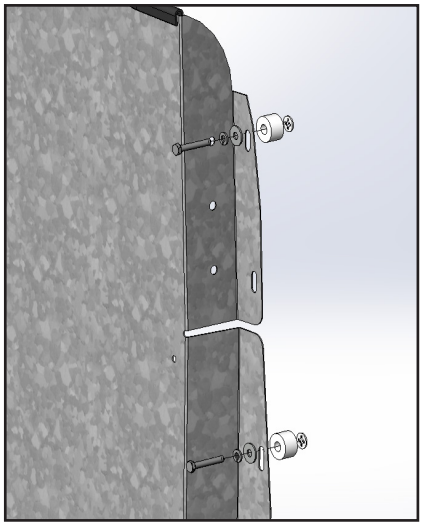

Put a bolt, lock washer, flat washer, spacers and a retaining washer in the 1st and 3rd holes of the passenger panel.

HARDWARE USED

2×

	#90-836 Hex Bolt M6 × 40
	#98-118 Lock Washer
	#98-112 Flat Washer
	#98-161 Spacers
	#98-158 Retaining Washer

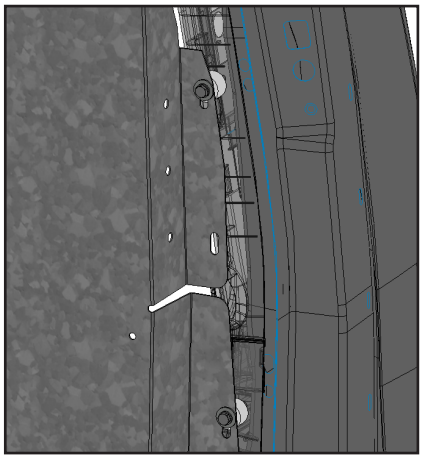

Attach the driver panel using the 2 hex bolts into 2 OEM threaded holes.

TOOLS

- ❑ Cordless Impact
- ❑ 7/16" Socket

2.3.5 Attach the driver and passenger side panels to the alignment bar and floor bracket.

NOTE:
- After installation is complete be sure that all the bolts are tightened.
- English warning label is already attached on the passenger side panel.

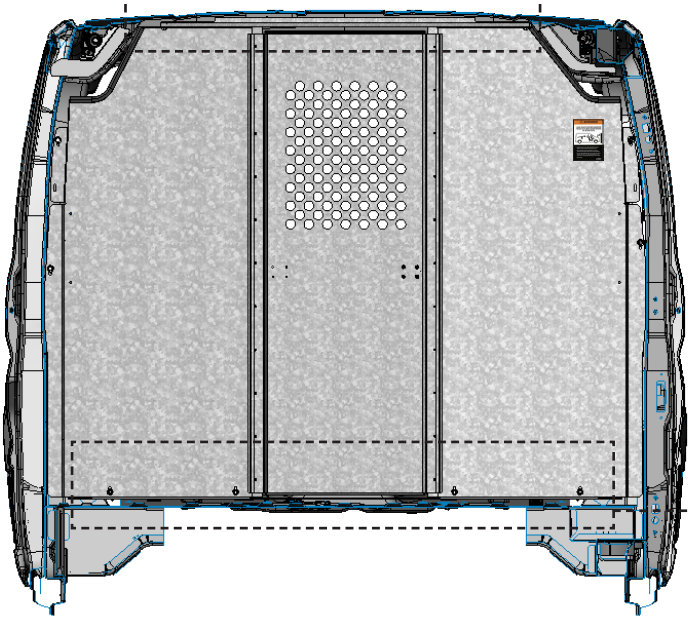

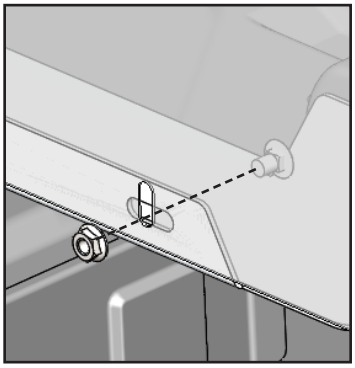

Attach the driver and passenger side panels to the floor bracket.

HARDWARE USED

4×

	#90-482 Carriage Bolt 5/16" × 1/2"
	#94-116 Serrated Nut

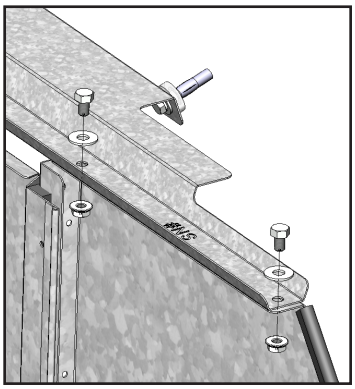

Attach the top alignment bar to the driver and passenger side panels, then apply the warning label on the passenger side panel.

HARDWARE USED

4×

	#90-200 Hex Bolt 5/16" × 1/2"
	#98-116 Flat Washer
	#94-116 Serrated Nut

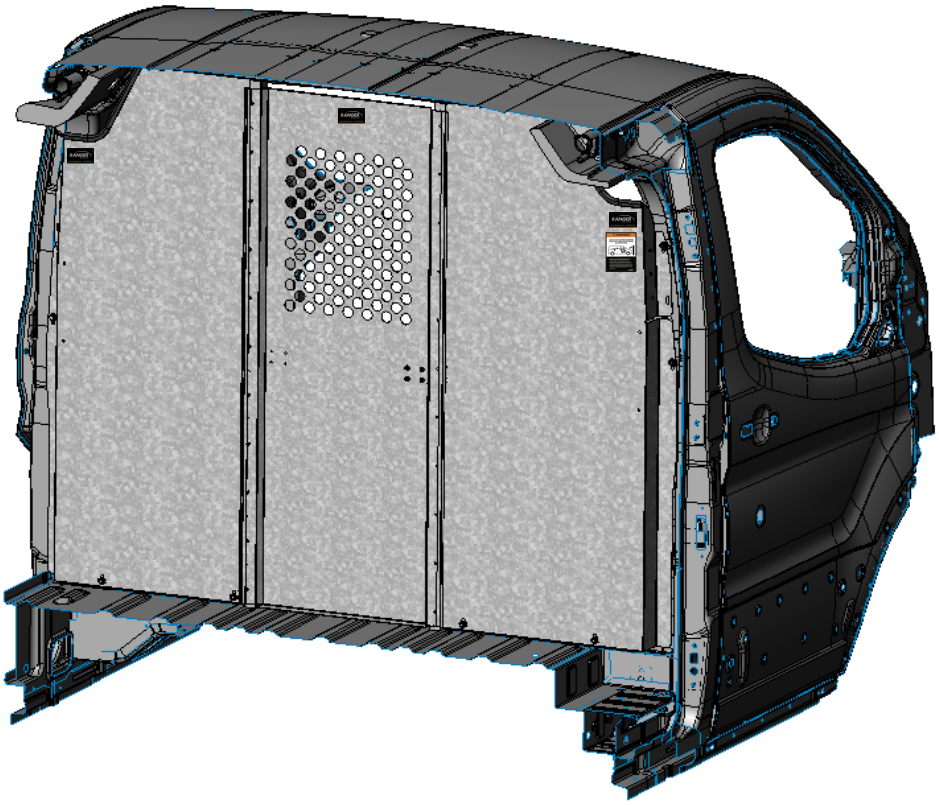

“Congratulations, you have successfully installed your C30-FTL Partition!

Thank you for doing business with us.”

For any feedback or suggestions you may have, please contact: cs@rangerdesign.com